Patrick Lindecker (F6CTE) the 17th of August 2019 Maisons-Alfort (France)

HOW TO DO DIRECT DSTAR QSOs WITH MULTIPSK - Rev. A

Introduction

Further on, it will be found the description of the necessary connections between a transceiver and a computer to do direct DSTAR QSOs, i.e. between 2 Hams on the same frequency, in half-duplex (i.e. one Ham at a time, in “simplex”), without repeater, with Multipsk.

This concerns:

- the audio frequency (AF) input and output,
- the switching transmission/reception on the VHF or UHF transceiver.

It will be also given an example of interface which is not generalized to other transceivers. It works for the author transceiver (TM255A/E) and surely on other transceivers. As a minimum, it will give ideas to the reader about this type of device.

Note that as there is no DSTAR repeater in the author’s neighborhood, the communication through a DSTAR repeater has not been tested and is not managed by Multipsk. However, the RPT1 and RPT2 fields can receive DSTAR repeater call signs, for any purposes. Note that, however, to use DSTAR repeaters, the user must be registered on the US-TRUST data base.

General principles

The two operations (transmission/reception) are done through the sound card of your computer, sound card that is connected:

- in input for reception, to the 9600 bauds output DATA pin from the discriminator. On the TM255A/E, this pin carries the number 4 on the mini-DIN plug and is called « PR9 »,
- in output for transmission, to the modulator input DATA pin. On the TM255A/E, this pin carries the number 1 on the mini-DIN plug and is called « PKD ».

To switch the transceiver in transmission/reception, it will be used the PTT (“ Push To Talk ”) pin which must be connected through an adequate electronic set to the RQS or to the DSR pin of the selected serial port on Multipsk. On the TM255A/E, the PTT pin carries the number 3 on the mini-DIN plug and is called « PKS ».

The common reference earth is normally a specific DATA earth. On the TM255A/E, this pin carries the number 2 on the mini-DIN plug and is called « DE ».

Mini-DIN (Data)

Schematic of the connections

```
                                                        ¦
      +----------------+       +--------------------+--+
      ¦ RX/TX screen   ¦       ¦    FM transceiver    ¦
      ¦ (Multipsk)     ¦       ++---------+-+---------+
      ¦                +---+    ¦PTT      ¦ ¦
      ¦                ¦   ¦ +--+------+  ¦ ¦
      +----------------+   ¦ ¦INTERFACE¦  ¦ ¦
    /                 /    ¦ +--+------+  ¦ ¦
   /    KEYBOARD    /      ¦    ¦   Micro-¦ ¦
   ----------------         ¦    ¦   phone ¦ ¦
              ¦             ¦    ¦   input ¦ ¦Speaker output
           +--+-----------+---++++-------++-+-+----+
           ¦                  ¦C¦       ¦ S  ¦    ¦
           ¦                  ¦O¦       ¦ O  ¦    ¦
           ¦ PC               ¦M¦       ¦ U  ¦    ¦
           ¦                  ¦ ¦       ¦ N  ¦    ¦
           ¦                  ¦x¦       ¦ D  ¦    ¦
           ¦                  +-+       ¦CARD¦    ¦
           ¦                            +----+    ¦
           +-------------------------------------+
```

Connections between the transceiver and the sound card

STANDARD CONNECTIONS OF THE SOUND CARD

```
+-------------------------------------+
¦      sound card                     O Microphone connector (input)
¦                                     ¦ Mono 3.5 mm jack
¦                                     O Speaker connector (output)
¦                                     ¦ Stereo 3.5 mm jack
+-------------------------------------+
```

On some sound cards, it exits two other connections:

- the “Line in” one which can be used instead of the “Microphone “one,
- the “Line out” one which can be used instead of the “Speaker” one.

To limit the RF returns will not be avoided when the Ham is in transmission, it will be disposed a ferrite around each cable. It can also be wired 1 meter of cable around a ferrite:

```
                           +-------+
Sound card (input)+---<----¦Ferrite¦---<--Transceiver (DATA, discriminator)
                           +-------+

                           +-------+
Sound card(output)+--->----¦Ferrite¦--→--Transceiver (DATA, modulator)
                           +-------+
```

<u>Notes</u> :

- The PC and the transceiver must share the same ground connection.
- The connections must be done with the PC and the transceiver disconnected from the electrical sector.

- If you want to isolate the AF signals (input and output) with transformers, be sure that their AF bandwidth not be smaller than the necessary bandwidth (of let's say 50 Hz to 3.5 KHz), otherwise it will not work.

Switching of the transceiver (connection between the transceiver and the RS232 serial plug on the computer)

In actual PC, there is no more serial plug. Hence it is necessary to plug an "USB to RS232 serial port" converter in a free USB port, so as to dispose of a serial port able to control the PTT terminal of the transceiver by one of the DSR or RQS pin of the serial port.
Afterwards, under the "Serial port" menu on Multipsk, select the corresponding converter COM port.

The interface described below works between my PCs and my KENWOOD TM255A/E transceiver.

For information
It perhaps exists interfaces for FSK 9600 bauds Packet, ready to be employed or Ham homemade (for example, https://www.m0spn.co.uk/2014/09/18/96001200-baud-soundcard-interface-with-ptt/).
They are perhaps compatible with DSTAR reception and transmission in direct. However, the author does not test any of them.
The author has not either tested standard interfaces for digital modes, because the bandwidth seems a bit narrow and the FM modulation adjusting difficult.

In the following page, it will be found the diagram of the author's PTT interface.

PTT INTERFACE

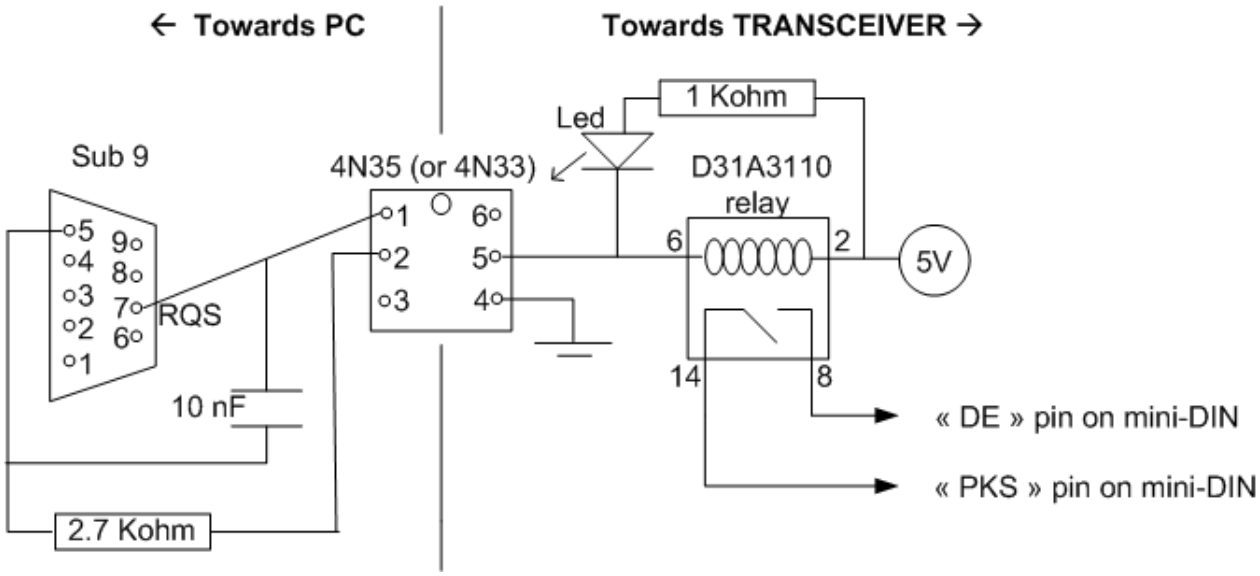

It is necessary to use a relay because the PTT requires a “dry” contact.

The Sub9 female connector is seen from the pins to weld. The pin number 5 is the logical ground. The RQS pin passes at about -10 V in reception and at +10 V in transmission. Before all, control that the voltage between pin 5 and pin 7 switches as expected when Multipsk switches to transmission and then to reception.
It could also be possible to use the DSR pin (number 6).

The 4N35 is a photo-coupler (it can be replaced by a 4N33 more sensitive).

The LED permits to see if the relay has switched (so it can be avoided).

I put a “REED” D31A3110 relay because I had one on hand. Moreover, it is fast (maximum switching frequency of 200 Hz), has a high coil resistance (500 ohm) and it needs a 5 V source (usual supply block).

If the switching does not occur:

- the supply block voltage can be increased,
- the value of the 2.7 Kohm resistance can be decreased,
- try with both 4N33 and 4N35 photo-couplers.

Use of this interface with Multipsk for DSTAR QSOs

The transceiver must be in FM.

To connect the transceiver to the antenna, better is to dispose of a coaxial feeder, if not there is a risk to get parasitic coming from the computer.

At the microphone and the speaker properties level (Windows mixer), all the sound effects must be deactivated.

On the TM-255 (and surely on other transceivers), it exists an option relative to the input level of the FM modulator. It is aimed to 9600 bauds Packet and applicable to DSTAR. It is a question to select an input range between -2 and 2 V instead of -0.04 to 0.04 V. This wide input range is important because it permits a fine adjusting, so as to reach an adequate frequency excursion. It will be checked that :

- the gap between the two modulation frequencies be equal to 2400 Hz,
- the transmission bandwidth doesn't pass about 6 KHz,
- the decoding (with an ICOM transceiver or Multipsk) is easy.

For this, the AF output level, generated by Multipsk in DSTAR, must also be adjusted with the speaker Windows mixer. Another Ham in DSTAR reception can help you. Indeed, Multipsk disposes of a beacon to adjust your reception and a "parrot" which permits to adjust your modulation: you transmit a DSTAR message towards the other Ham station disposing of the "parrot", if there is no repetition from the "parrot", it means that your modulation is incorrect and reversely.

You can also control your modulation (transmission done on a resistive charge) and the possibility to decode it, with a RTL-SDR dongle (without antenna) connected to another PC, Multipsk working on DSTAR decoding, in SdR configuration.
For this, it is transmitted DSTAR frames, for example in beacon mode with an interval of 10 seconds, towards the transceiver connected to the resistive charge. The user notes the minimum and maximum levels on the speaker mixer allowing the decoding of the DSTAR frames. It is chosen the mean level between these two levels.
For example, the author found a minimum level of 25 % and a maximum one of 75 %. So he has chosen the mean level of 50 %.

> <u>Note</u> : this possibility of base band DSTAR transmissions is only proposed for a standard transceiver (i.e. non SdR). In SdR configuration, Multipsk does not propose DSTAR transmission.

DSTAR reception

In DSTAR reception the AF input level must be adjusted with the Windows mixer, so as not to have an overloaded level. An AF level displayed on Multipsk between 10 and 50% (not critical) is correct.

For the different option about the DSTAR reception and transmission, see the Multipsk manual.

Hints about the Multipsk help:

- To bring up the text manual (contextual sensitive one), click on the right button of the mouse, with the cursor over the mode button "DSTAR", for example.

- Also use the button hints (wait a fraction of second over a button).